W30 SŁ P/L ASTI

v.1

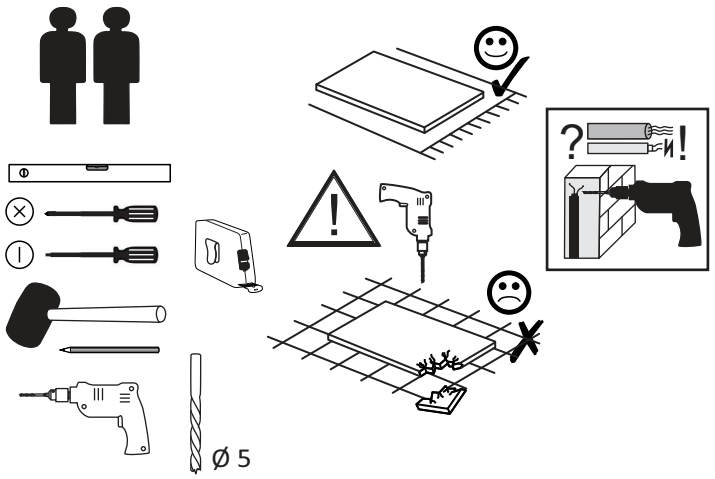

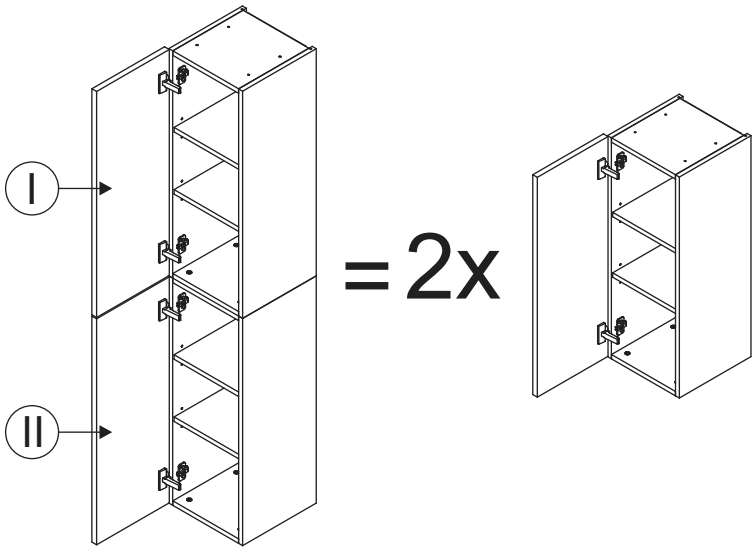

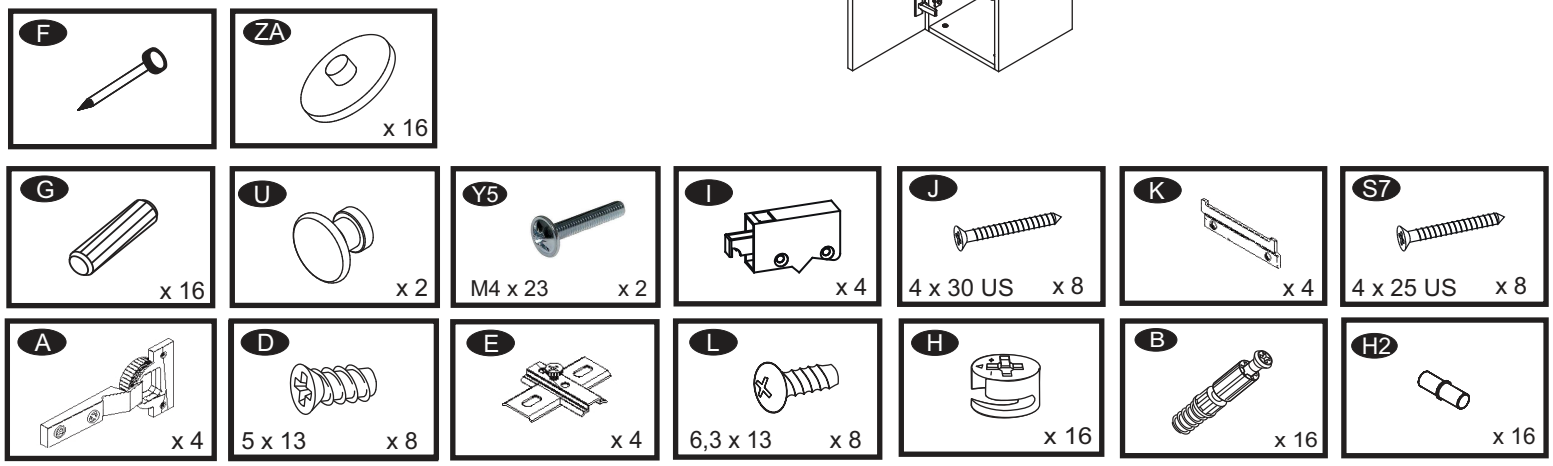

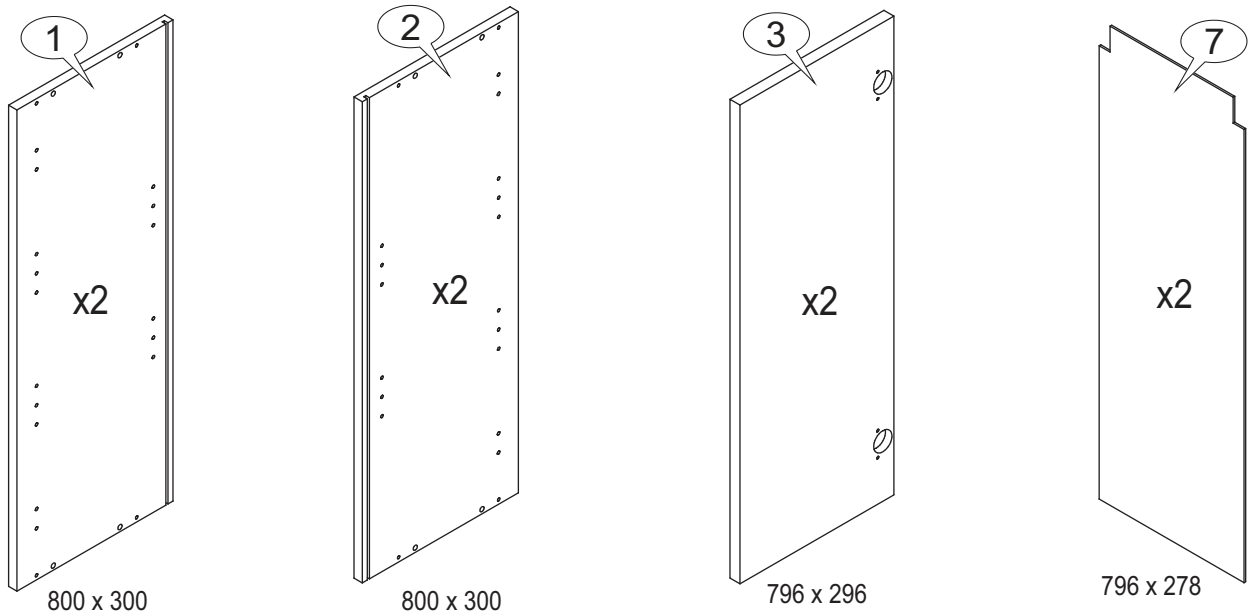

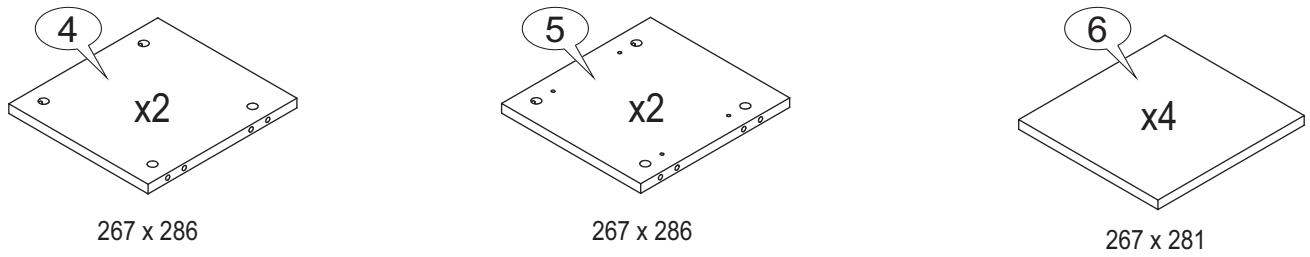

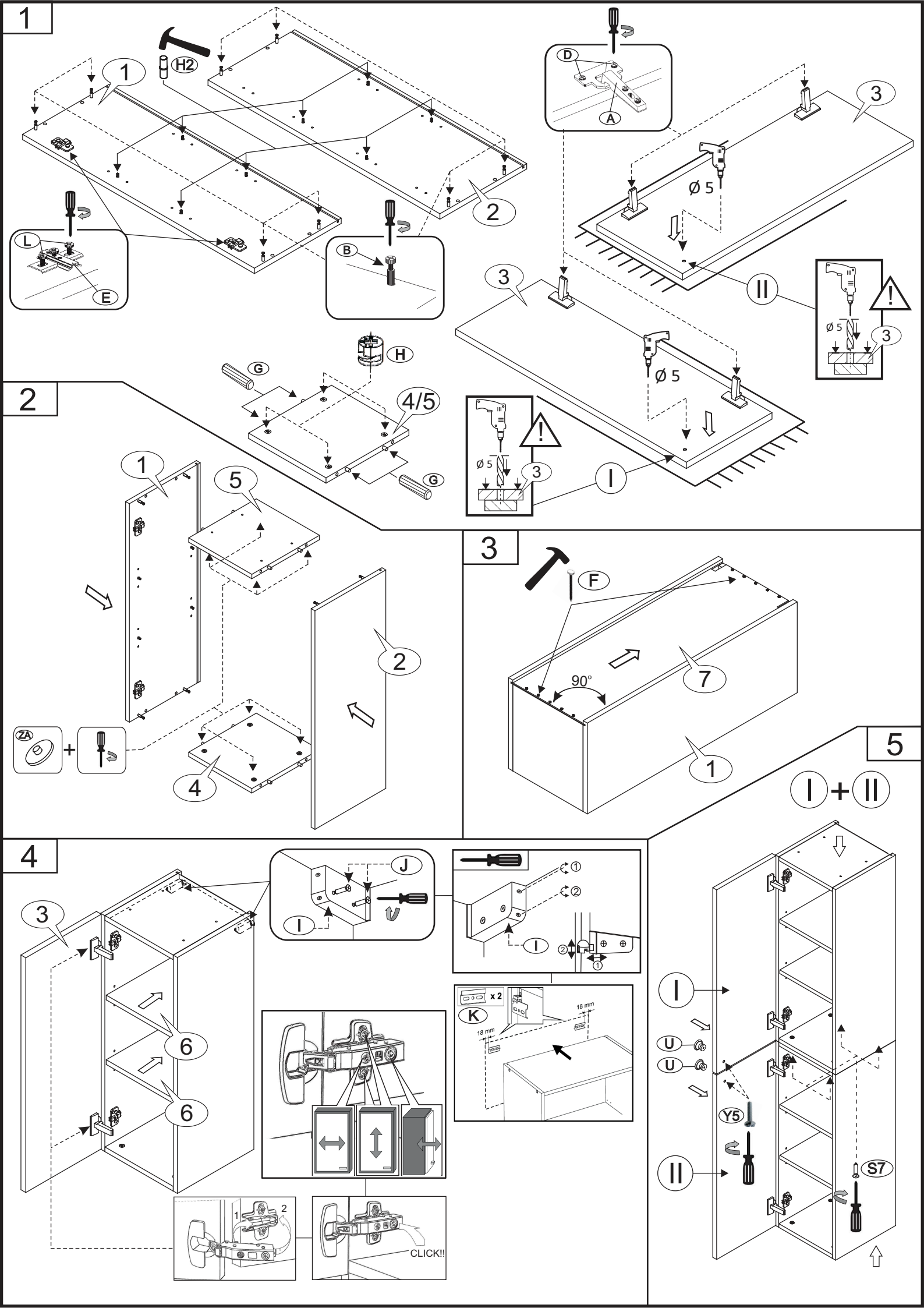
1
H2
1
2
L
E
B
D
A
3
Ø 5
II
3
Ø 5
3
Ø 5
3
I
G
H
4/5
G
2
1
5
2
ZA
+
4
3
F
90°
7
1
5
I + II
4
3
J
I
I
6
6
x 2
K
18 mm
18 mm
I
U
U
Y5
II
S7
1
2
CLICK!!